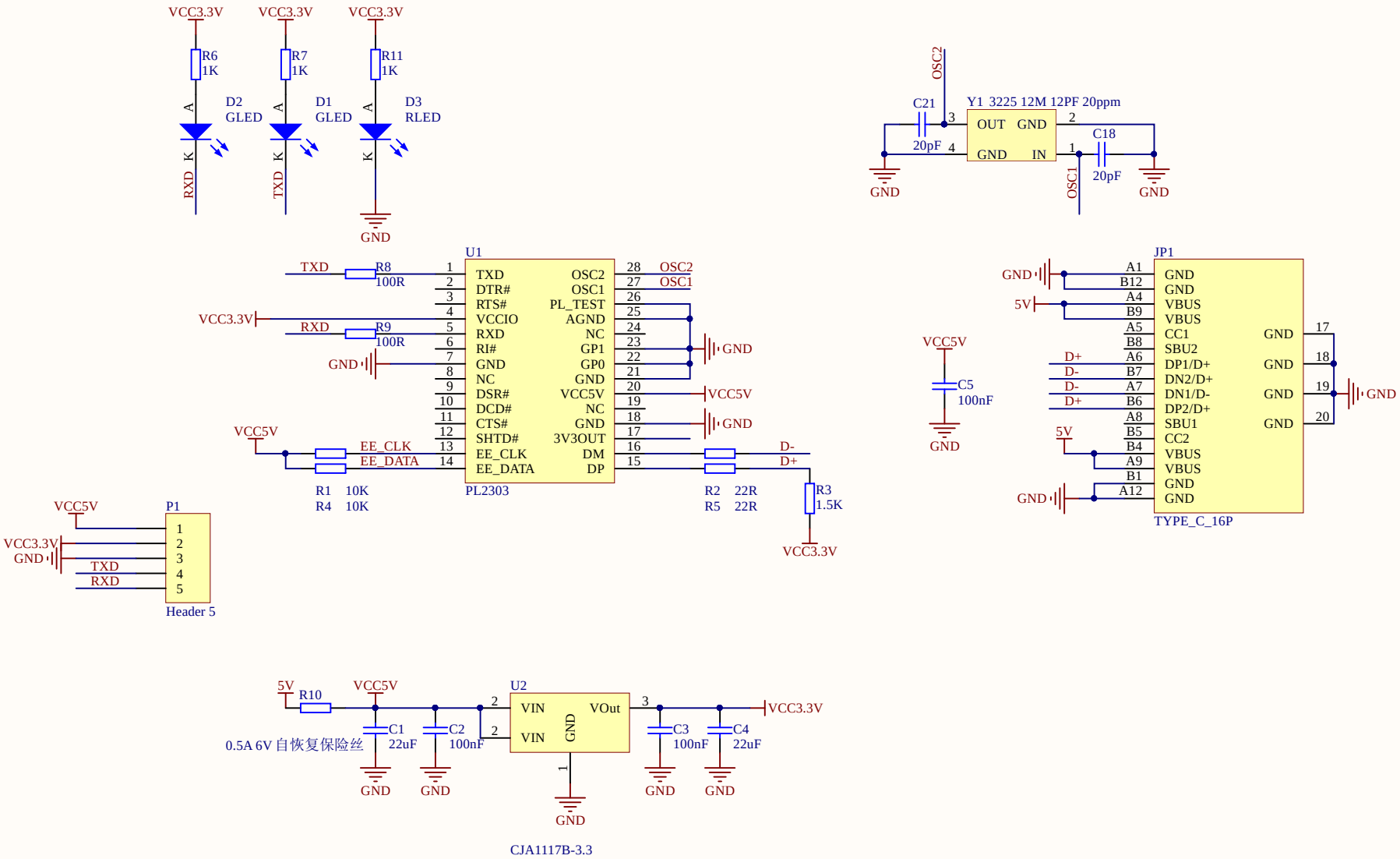

Title		
Size A4	Number	Revision
Date: 2020/11/20		Sheet of
File: C:\Users\..\PL2303.SchDoc		Drawn By: