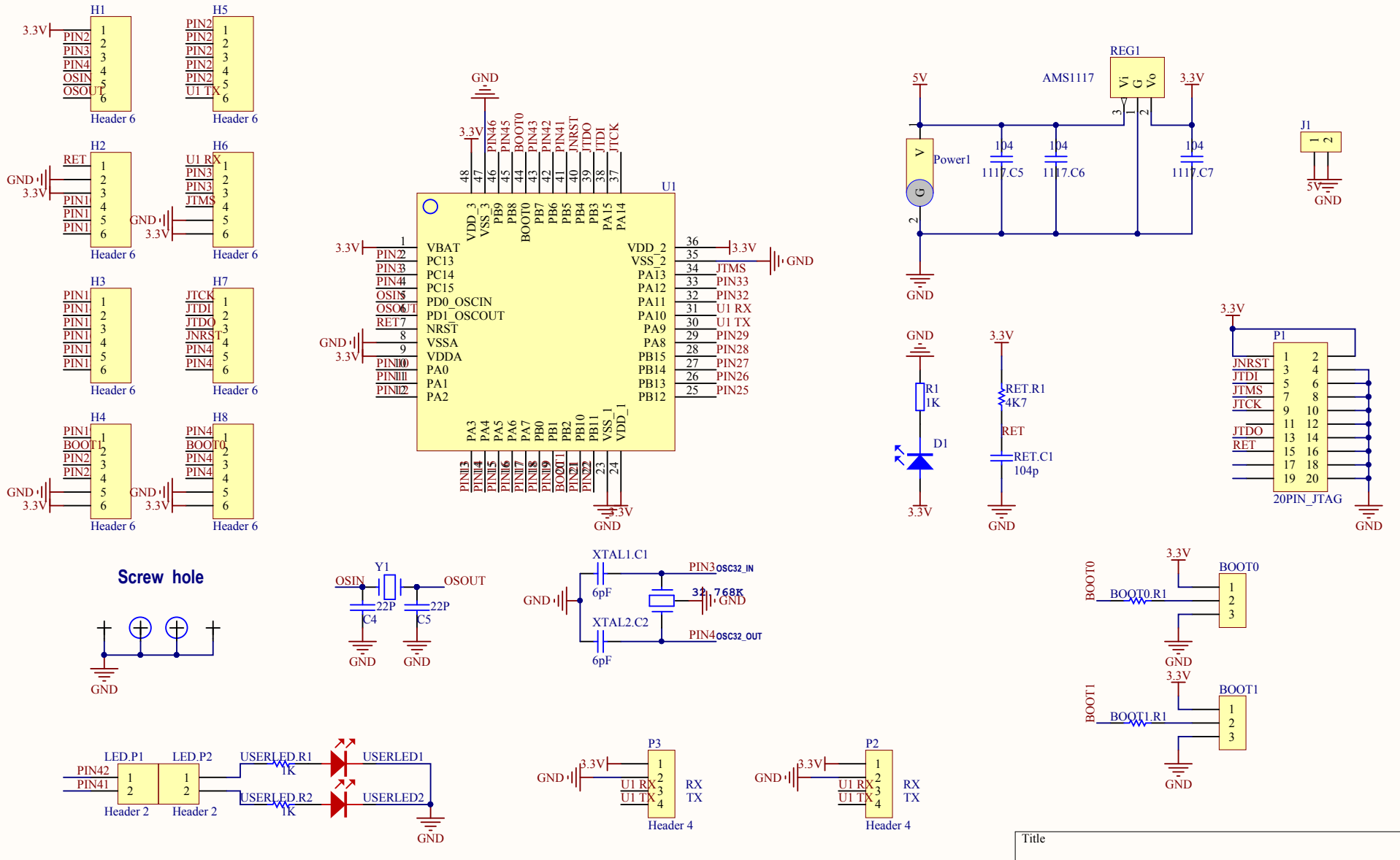

Title		
Size A4	Number	Revision
Date: 2015/4/13	Sheet of	
File: E:\林新武-SVN\..\STM32-QFP48.SchDoc	Drawn By:	