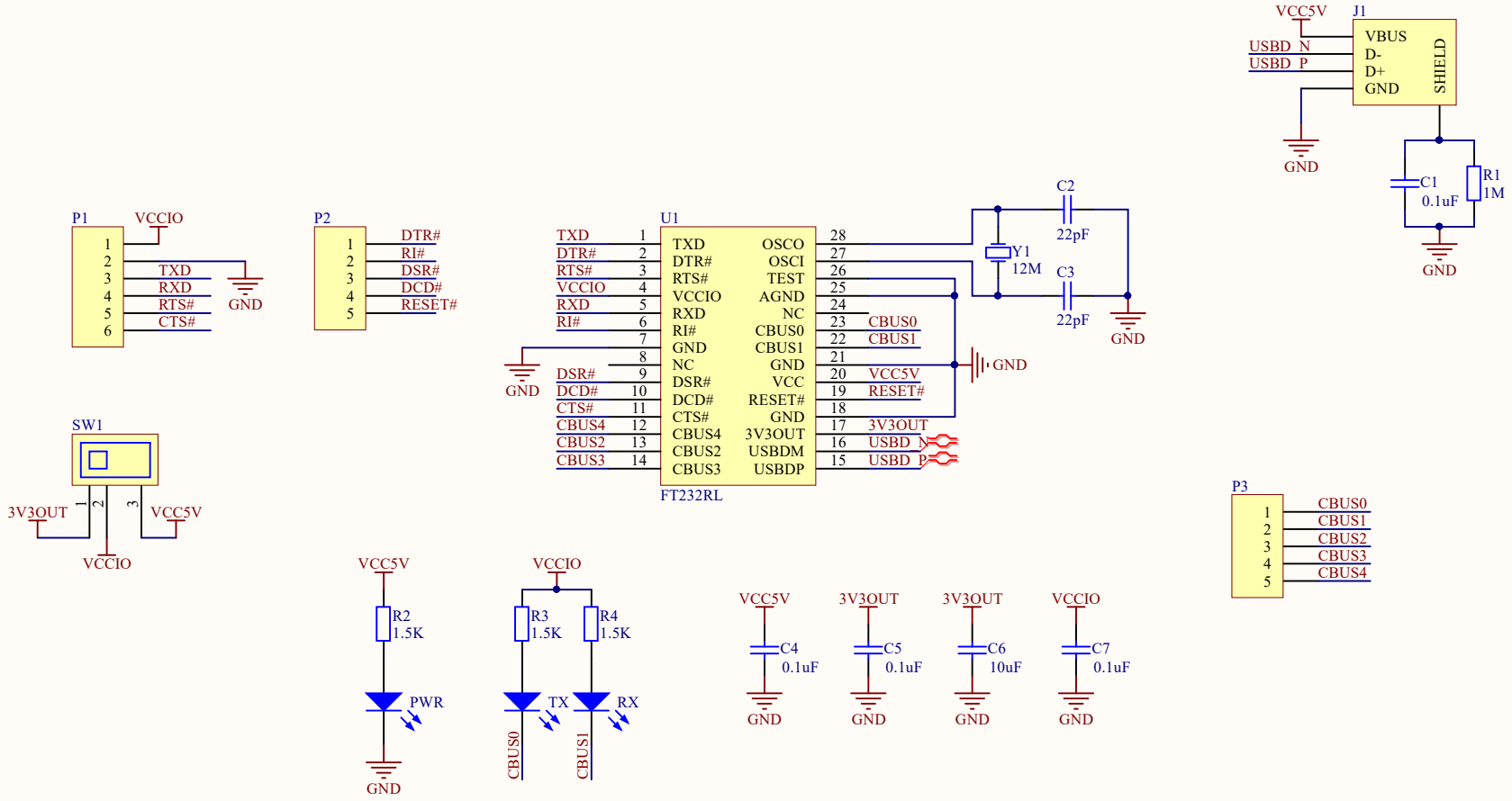

Title		
Size A4	Number	Revision
Date: 2020/9/9	Sheet of	
File: C:\Users\..\FT232_TYPE_AM.SchDoc	Drawn By:	