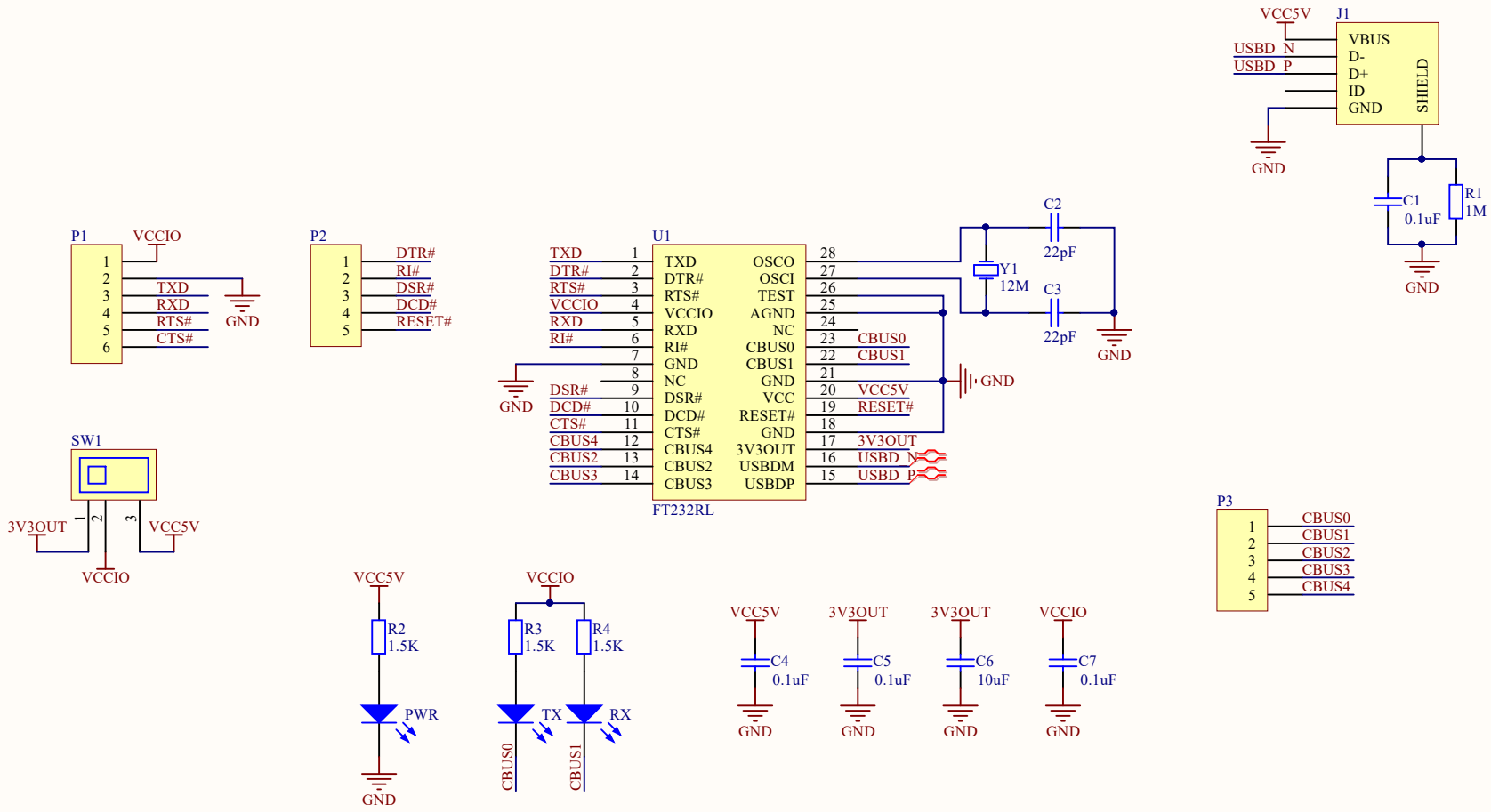

Title		
Size A4	Number	Revision
Date: 2020/10/19		Sheet of
File: C:\Users\..\FT232_MICRO.SchDoc		Drawn By: