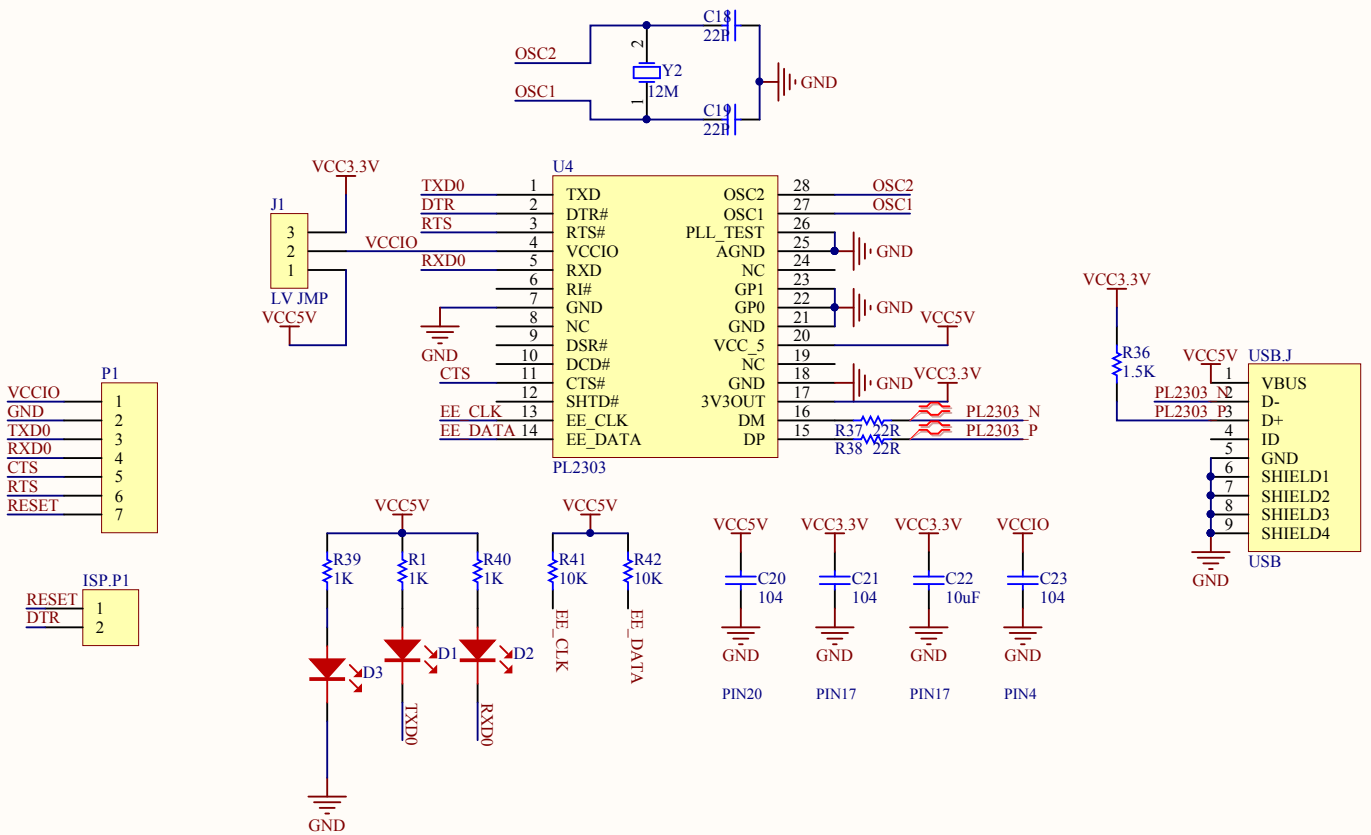

Title		
Size A4	Number	Revision
Date: 2014/10/24 星期五		Sheet of
File: \\..\LPC ISP(mini).SchDoc		Drawn By: