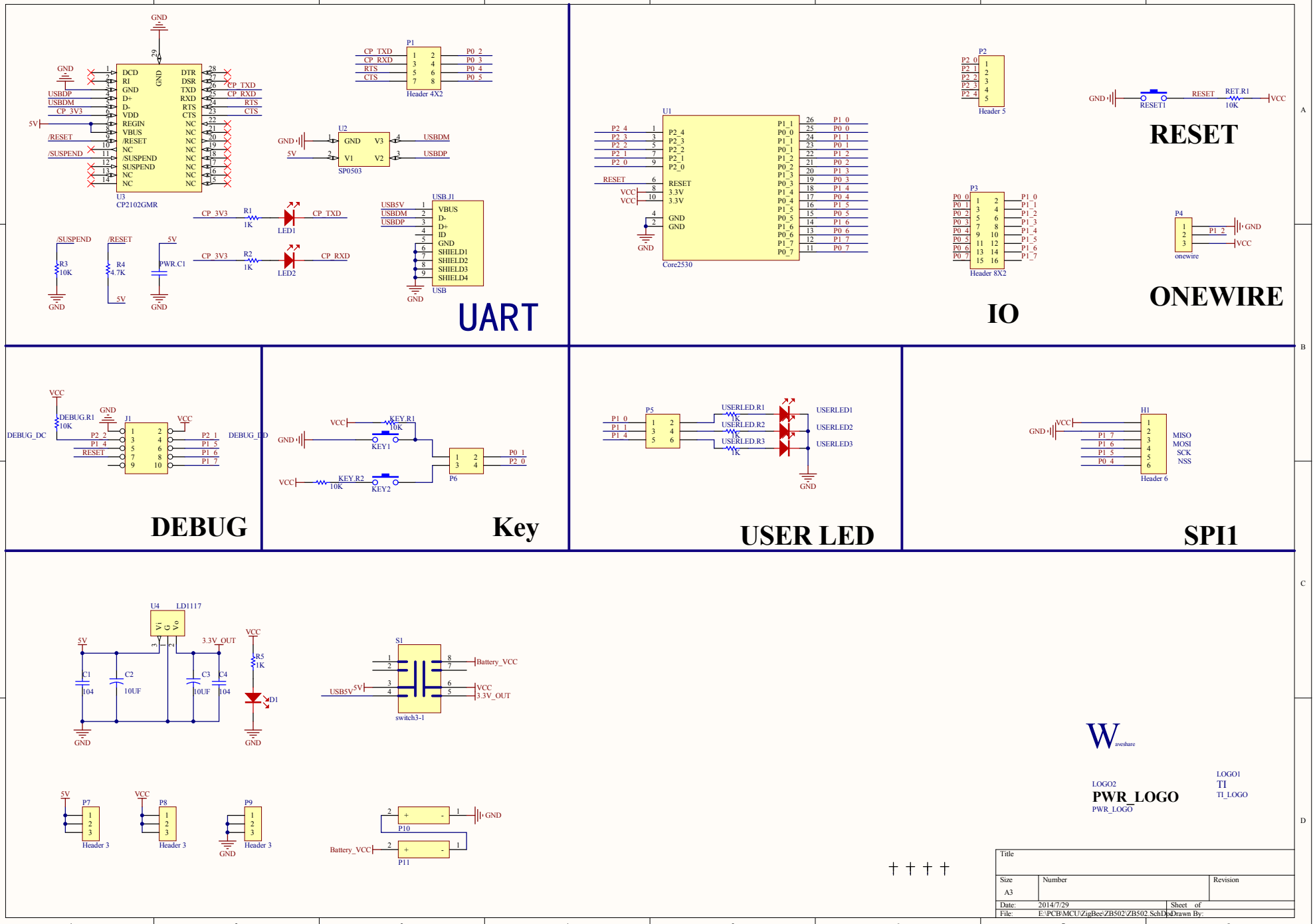
UART
U3
CP2102GMR
P1
Header 4X2
U2
SP0503
USB.J1
USB
LED1
LED2
R1 1K
R2 1K
R3 10K
R4 4.7K
PWR.C1
IO
U1
Core2530
P2
Header 5
P3
Header 8X2
RESET
RESET1
RET.R1 10K
ONEWIRE
P4
onewire
DEBUG
J1
DEBUG.R1 10K
Key
KEY.R1 10K
KEY.R2 10K
KEY1
KEY2
P6
USER LED
P5
USERLED.R1 1K
USERLED.R2 1K
USERLED.R3 1K
USERLED1
USERLED2
USERLED3
SPI1
H1
Header 6
MISO
MOSI
SCK
NSS
U4 LD1117
C1 104
C2 10UF
C3 10UF
C4 104
R5 1K
D1
S1
switch3-1
Battery_VCC
P7
P8
P9
Header 3
P10
P11
LOGO2
PWR_LOGO
LOGO1
TI
TI_LOGO
Title
Size A3
Number
Revision
Date: 2014/7/29
Sheet of
File: E:\PCB\MCU\ZigBee\ZB502\ZB502.SchDoc
Drawn By: