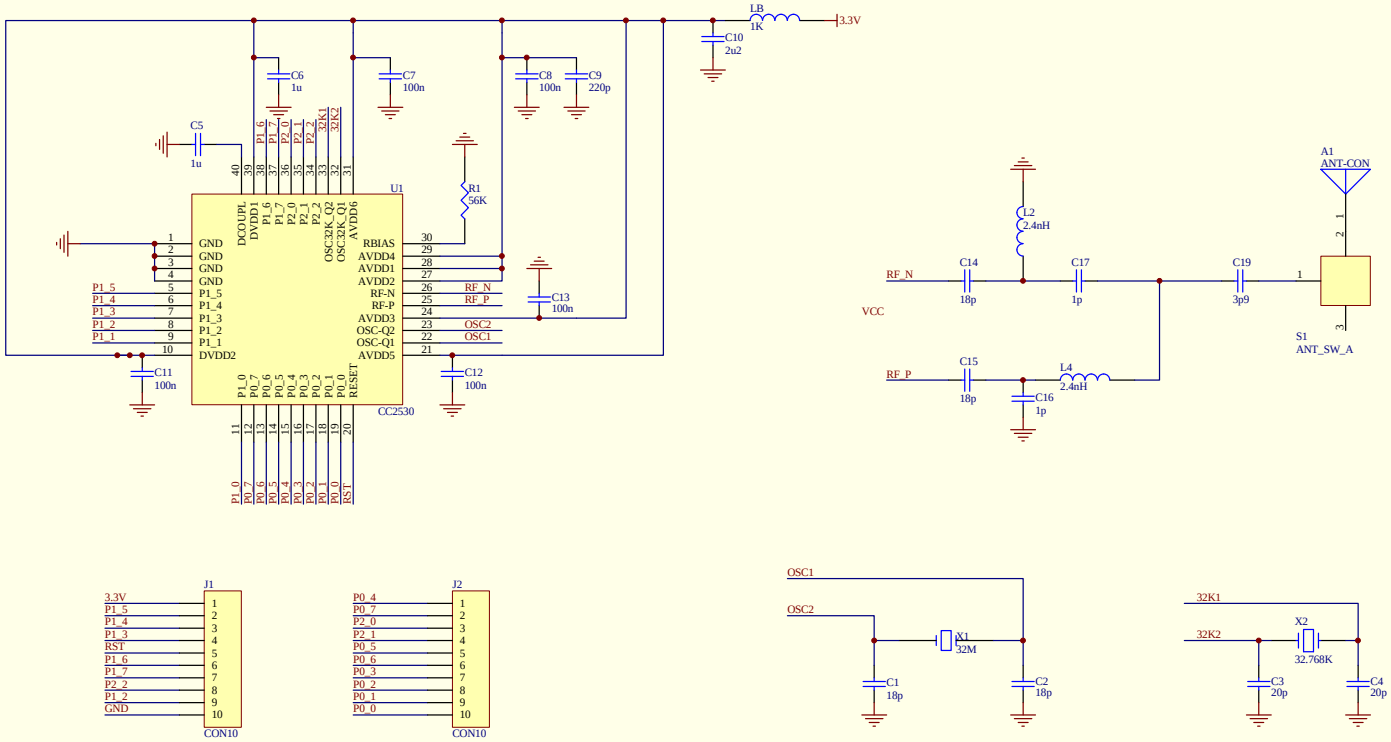

Title		
Size B	Number	Revision
Date: 11-Apr-2016		Sheet of
File: D:\Xbee\WX.ddb		Drawn By: