REV.	DATE	EC NO.		APP. BY

RoSH

CONNECTOR
24PIN DESCRIPTION

NO.	SYMBOL
1	STROBE
2	DGND
3	SIO_D
4	AVDD
5	SIO_C
6	RESET
7	VSYNC
8	PWDN
9	HREF
10	DVDD
11	DOVDD
12	Y9
13	XCLK1
14	Y8
15	DGND
16	Y7
17	PCLK
18	Y6
19	Y2
20	Y5
21	Y3
22	Y4
23	NC
24	AF-VCC

Top view

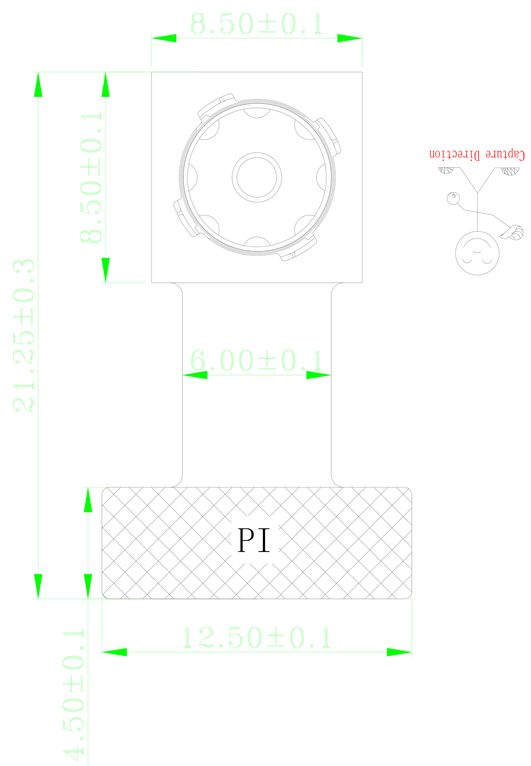

Side view

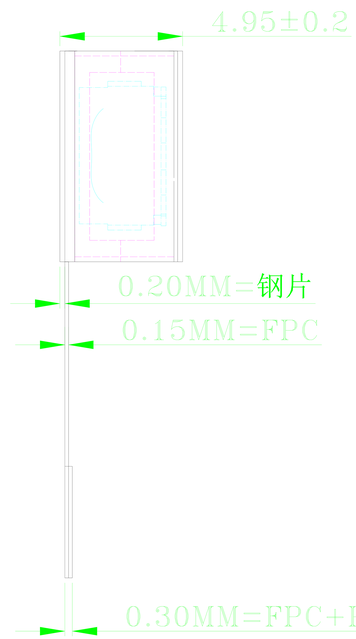

Bottom view

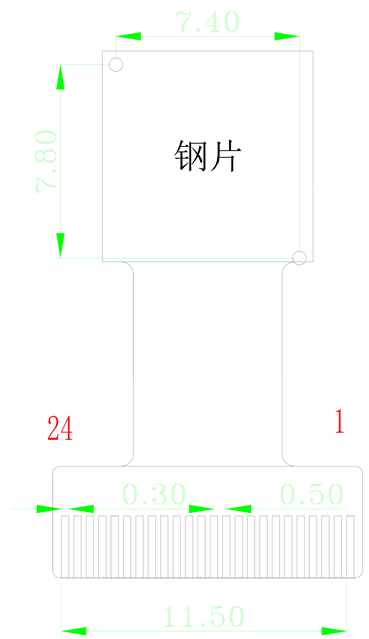

Lens parameter

镜头型号		感光芯片(Chip Type)	OV5640
焦距(EFL)	3.37MM	像素(Array Size)	2592*1944
光圈(F.NO)	2.8	镜头类型(Lens Size)	1/4inch
视场角(View Angle)	67.4°	数字电路电压(DVDD)	1.5V±5%
畸变(Distortion)	<1%	模拟电路电压(AVDD)	2.6Vto3.0V
主光线角度（CRA)	<26°	接口电路电压(DOVDD)	1.8Vor2.8V

ITEM	PART NAME	DWG NO.	QTY	MATERIAL REMARK

TITLE :

SCALE : 1:1

MATERIAL :

TREATMENT :

UNSPECIFIED TOL:
.XXX ± 0.005
.XX ± 0.05
.X ± 0.1
∠ ± 0.5°

DWN.BY :

CHK.BY : / /

APP.BY : / /

PROJECT NO.:

DWG NO.:

CAD NO.:

ALL DIMENSION IN MM

REMOVE ALL BURRS
BREAK SHARP EDGES

DO NOT SCALE

SHEET OF P1/1

A4